ELBOW ORDER SHEET ONLY

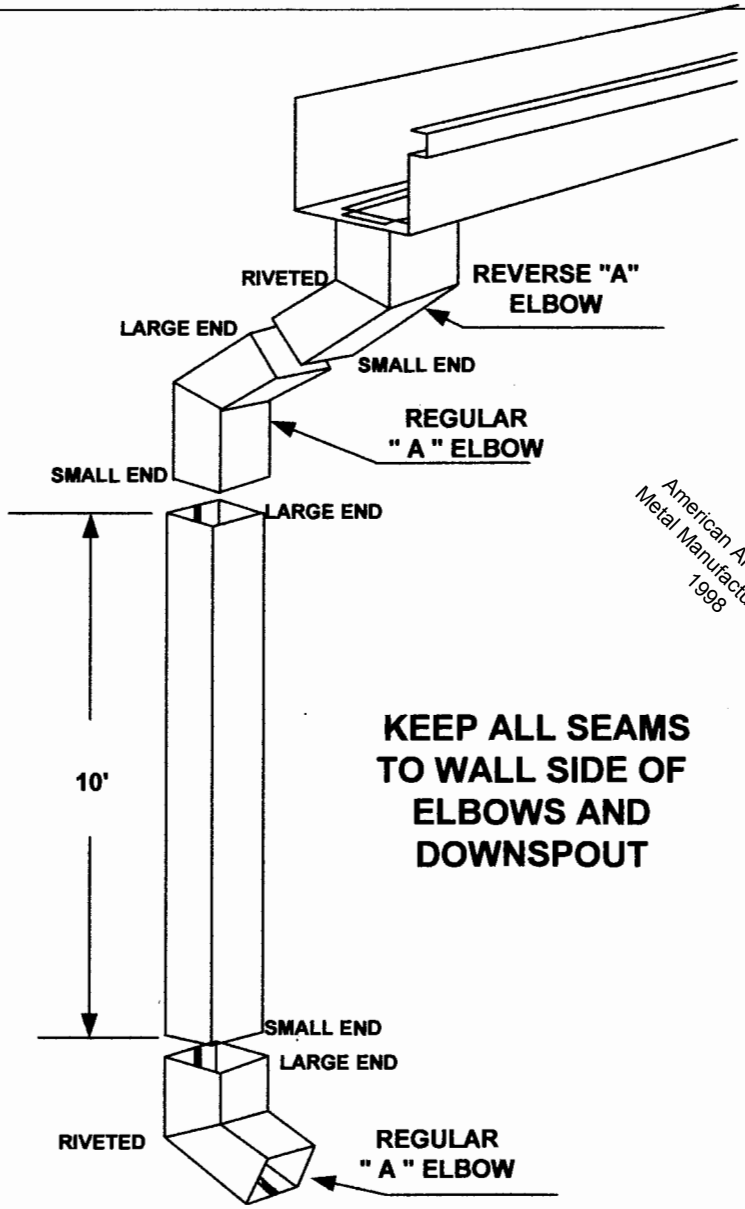

American Architectural Metal Manufacturers, Inc. 1998

KEEP ALL SEAMS TO WALL SIDE OF ELBOWS AND DOWNSPOUT

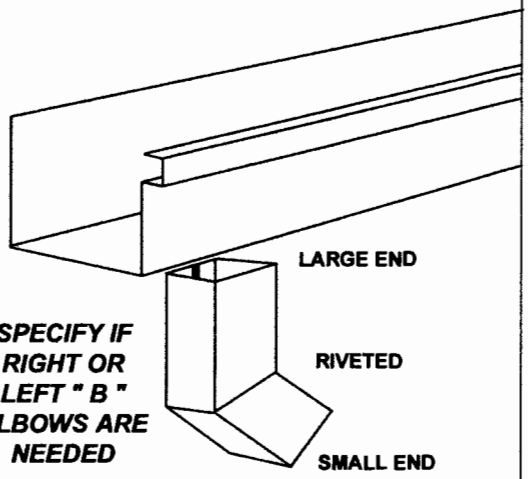

SPECIFY IF RIGHT OR LEFT " B " ELBOWS ARE NEEDED

RIGHT "B" ELBOW SHOWN

MATERIAL: QUANTITIES:

☐ 24 Ga. Galv. ☐ 22 Ga. Galv.

☐ .032" ☐ .040" ☐ .050" ALUMINUM

OTHER MATERIALS AVAILABLE

ELBOW SIZE _____ X _____ °

ELBOWS _____ A _____ °

_____ B _____

Color: _____ Finish: _____

PROJECT NAME:

QUOTE: ☐

ORDER: ☐ PO# _____

INSTALLER:

SIGNATURE:

AMERICAN ARCHITECTURAL METAL MANUFACTURERS, INC. ®

EAGLE DRAINAGE SYSTEMS

A AND B ELBOW DETAILS

Drawn by AAMMI 1998